ITEM	PartNo	DESCRIPTION	QTY.
1	101002-18	STARTER PLATE CRANK MOUNT FIXED 7 INCH	1
2	202025-11	BRG HOUSINGD FIXED CRANK STARTER MOUNT 7.0	1
3	202007-09	481X CRANK TRIG BRK W-CRANK SUPPORT WING RIGHT	1
4	202035-20	STAND CRANK SUPPORT 4.25	4
5	202035-88	BRACE CRANK SUPPORT STAND RIGHT	1
6	350525-10	62 BALL BRG 50 x 90 x 20	1
7	352505-50	WASHER HEAT TREATED 0.38 I.D. 0.125 THICK 0.90 DIA	4
8	356337-16	3/8-16 X 1.0 12PT	4
9	356925-08	1/4-20 x 0.50 FHCS	4
10	202026-03	BRG SUPP MANDREL FIXED CRANK STARTER DRIVE	1
11	202026-04	BRG RETAINER STARTER DRIVE HUB FIXED STARTER	1
12	354505-16	.25 X 0.875 KEYSTOCK HEAT TREATED	2
13	356237-32	3/8-24 X 2.0 12PT	6
14	101303-09	ENGINE JAW 6 HOLE	1
15	356237-12	3/8-24 X 0.75 12PT	6
16	356343-64	7/16-14 X 4.00 12PT	6
17	357350-72	SHCS 1/2-20 x 4.50	1
18	202007-10	481X CRANK TRIG BRK W-CRANK SUPPORT WING LEFT	1
19	357725-10	HHB 1/4-20 x .625	1

ITEM	PartNo	DESCRIPTION	QTY.
20	352503-04	1/4 AN WASHER	1
21	352503-07	7/16 AN WASHER	10
22	356343-16	7/16-14 X 1.00 12PT	4
23	356937-24	FHCS 3/8-16 X 1.50	4
24	202022-20	POINTER RCD FRONT COVER ADJUSTABLE 14 DEG	1
25	202035-89	BRACE CRANK SUPPORT STAND LEFT	1
26	356925-08	FHCS 1/4-20 X .50	4

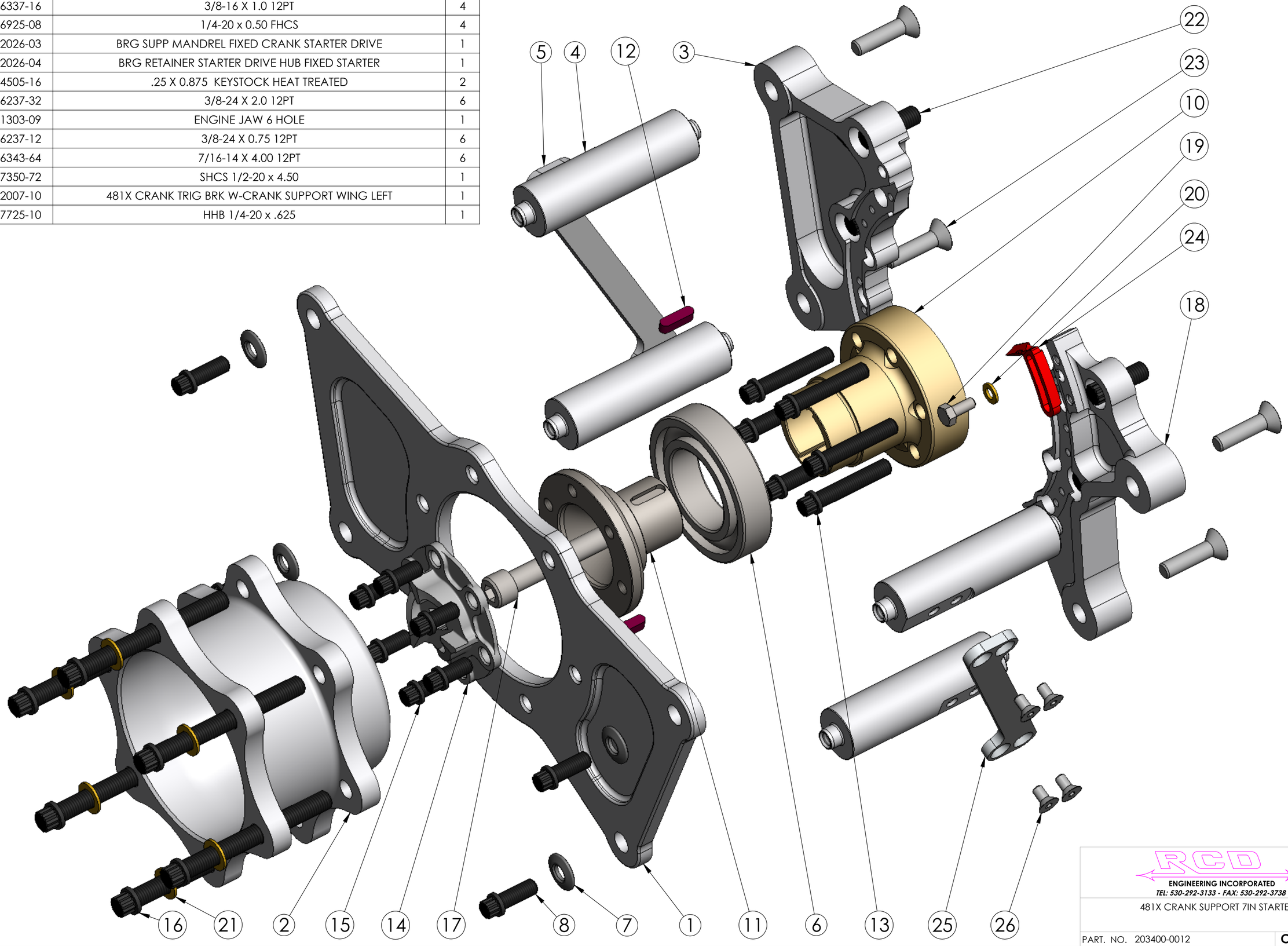

RCD
ENGINEERING INCORPORATED
TEL: 530-292-3133 - FAX: 530-292-3738

481X CRANK SUPPORT 7IN STARTER

PART. NO. 203400-0012 | C | SHEET 1 OF 1